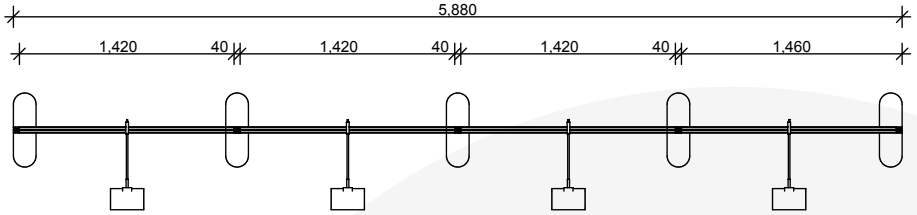

Plan

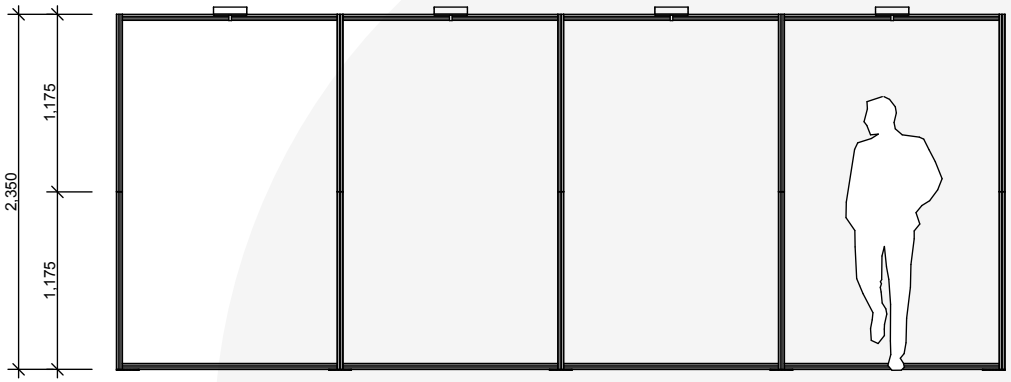

Elevation

Popular Configurations

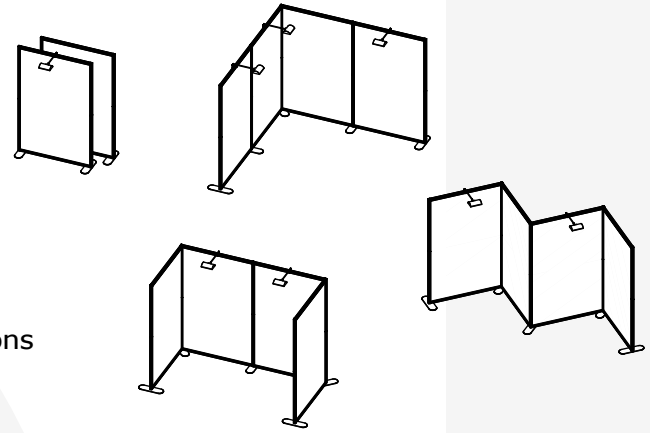

Kit Components

TechStyle Fabric Skins

Dye sublimated graphic panels
4 x 1420mm wide x 2270mm high

TechStyle Framing

Anodised lightweight aluminium
10 x 1175mm lengths
8 x 1420mm lengths

TechStyle LED Light

110~240v LED clamp mounted spotlight (not included as standard)

TechStyle Feet

5 x anodised lightweight aluminium feet

TechStyle Carry Case

Lightweight wheeled carry cases for ultimate portability

TechStyle

The Ultimate Exhibition System

TS4 61500F

The drawings on this sheet are protected by Copyright and remain the property of Brandstand Ltd

BrandStand
Unleash your brand

www.exhibitionstands.co.nz Brandstand (NZ) Ltd. 14H Vega Place, Mairangi Bay, North Shore City. Tel: +64 (09) 415 4090 Fax: +64 (09) 415 4091 FREEPHONE 0800 10 99 88 Email: sales@brandstand.co.nz